CASE CONSTRUCTION

B SERIES

SKID STEER LOADERS
COMPACT TRACK LOADERS

SR175B | SV185B | SR210B | SR240B | SR270B | SV280B
SV340B | TR270B | TR310B | TR340B | TV370B | TV450B

ACROSS HISTORY

50 YEARS
CASE SKID STEER

1842
CASE is founded.

1969
CASE begins skid steer loader production with the first model the 1530 Uni-Loader.

1995
CASE initiates co-branding and supply agreements with several key suppliers for power and application attachments as well as quick couplers.

1998
The exclusive Ride control is introduced on loader backhoes and skid steer loaders: another CASE first.

2011
CASE launches brand new series of skid steer and compact track loaders.

2015
New Tier 4 Final / EU Stage IIIB models further enrich CASE skid steer and compact track loaders offering.

2017
CASE introduces upgraded 90 hp models with increased performance and SCRonly Tier 4 Final / Stage IV technology. Wichita plant achieves the recognition of Silver Level in WCM (World Class Manufacturing), a methodology applied to improve quality by increasing the plants efficiency. On March 13, 2017 CASE sold its the 300,000th skid steer loader/compact track loader.

2019
CASE celebrates 50 years of reliability and high performances: skid steer loaders built tough with more power and torque along with unparalleled productivity and operator comfort.

2020
The new B-Series is launched to begin a new half century of best-in-class skid steerloaders / compact track loaders.

2021
The CASE B-Series is powered by the new Stage V emission compliant engines.

PRODUCTIVITY
AND RELIABILITY

RADIAL AND VERTICAL BOOM

To deliver CASE specific performance and productivity to a wide range of customers, CASE Construction skid steer and compact track loader line-up is composed by twelve models, featuring both radial and vertical lifting power. Seven models of skid steer loaders, of which four with radial kinematic (SR) and three with vertical one (SV), as well as five compact track loaders, of which three with radial lift (TR) and two vertical model (TV).

CLEAN POWER,
MAXIMISED PRODUCTIVITY

Model	Power HP (kW)	Engine	Emissions/ATS
SR175B	67 (50)	PERKINS 404J-E22TA	Stage V
		HPCR 2.2 lt	CEGR + DOC + DPF
SV185B	60 (45)	PERKINS 404J-E22TA	Stage V
		HPCR 2.2 lt	CEGR + DOC + DPF
SR210B	74 (55)	FPT F5H	Stage V
		HPCR 3.4 lt	CEGR + DOC + DPF
SR240B	74 (55)	FPT F5H	Stage V
		HPCR 3.4 lt	CEGR + DOC + DPF
SR270B	90 (67)	FPT F5H	Stage IV / Tier 4 Final
		HPCR 3.4 lt	CEGR + SCR
SV280B	74 (55)	FPT F5H	Stage V
		HPCR 3.4 lt	CEGR + DOC + DPF
SV340B	90 (67)	FPT F5H	Stage IV / Tier 4 Final
		HPCR 3.4 lt	CEGR + SCR
TR270B	74 (55)	FPT F5H	Stage V
		HPCR 3.4 lt	CEGR + DOC + DPF
TR310B	74 (55)	FPT F5H	Stage V
		HPCR 3.4 lt	CEGR + DOC + DPF
TR340B	90 (67)	FPT F5H	Stage IV / Tier 4 Final
		HPCR 3.4 lt	CEGR + SCR
TV370B	74 (55)	FPT F5H	Stage V
		HPCR 3.4 lt	CEGR + DOC + DPF
TV450B	90 (67)	FPT F5H	Stage IV / Tier 4 Final
		HPCR 3.4 lt	CEGR + SCR

STAGE V ENGINES

CASE Skid Steer and Compact Track Loaders are equipped with state-of-the-art Stage V engines featuring the High Pressure Common Rail (HPCR) technology, which regulates fuel pressure and injection timing ensuring extremely high injection precision in all engine operating conditions. This results in more torque output and allows to get more useful power from every drop of fuel.

+ **Cooled Exhaust Gas Recirculation (CEGR) process is controlled electronically to achieve greater performance and fuel efficiency, as well as even greater reliability.**
+ **Diesel Particulate Filter (DPF) physically traps particulate matter from the engine exhaust. Electronic controls trigger the automatic thermal treatment, completely transparent for the operator and with no impact on the vehicle operations, to keep the filter clean and allow the engine to deliver top level performances in all applications.**
+ **SCR- technology on all 90 hp models; a liquid reductant agent (ammonia) is injected into the exhaust stream to reduce the level of NOx.**

POWER OUTSIDE, COMFORT INSIDE

OUTSTANDING STABILITY WITH CASE POWER STANCE CHASSIS

Our power stance chassis rides on a 21% longer wheelbase, delivering greater stability and comfort and allowing increased lifting capabilities, regardless of jobsite conditions.

Great stability thanks to the long wheelbase

TOP RANKING BREAKOUT FORCE

CASE cylinder and chassis design provides maximised pushing power

The cylinder geometry optimises the skid steer and compact track loader's push and pull power, while the bucket support baring directly on the chassis of the machine further adds to its pushing power.

Chassis supports pushing power!

HIGH ROC WITH BOLT-ON COUNTERWEIGHTS

Simply bolt on additional counterweights to the rear sides of the machine. Increase ROC by adding counterweights to move more material, more quickly Decrease ROC (operating without counterweights to keep fuel costs down and decrease ground disturbance.

Additional Counterweight to increase ROC

THE MOST COMFORTABLE
MAXIMISED PRODUCTIVITY

COMFORTABLE AND SAFE CAB
Leading operator comfort

The wide door, repositioned grab handles and a lower threshold provide easy access to the cab. All models have suspension seats and optional air suspension heated seats for the ultimate in comfort. If specified with full cab glazing and door, the cab is completely sealed to reduce the amount of noise and dust.

OUTSTANDING ROOMINESS

It's not just the range that has expanded: all models benefit from a cab with up to 25% more internal width, providing greatly improved operator comfort. Our cab - the widest in the industry - provides plenty of room for comfortable operation, with greater headroom and legroom, more space between the control levers and easy access to the seat.

HIGH VISIBILITY
Wider glazed surface for safer operations

The large glazed surface with ultra-narrow wire side screens, cab-size rearview mirror, lowered threshold and thinner front pillars provide the best visibility in the market (ROPS / FOPS cab).

EASY ACCESS
Safety first

Low threshold, together with convenient grab handles make accessing the cab easy and safe.

POWER OUTSIDE, COMFORT INSIDE

IT'S ALL ABOUT THE DRIVER

+ The premium control interface with 8'' color display offers intuitive navigation through the machine information and settings
+ The new rearview camera, which can be displayed at any time on the 8" monitor, during all operations or just during the reverse motion, brings the outer visibility and the consequent safety on the jobsite to a higher level
+ The all new Bluetooth Headliner radio with USB connector contributes to elevate the CASE Customer experience in the cockpit
+ The cup holder compartment has been re-designed to improve the storage capacity. The compartment also hosts the USB connector.

CONTROL EVERYTHING
WITH TWO FINGERS

CREEP SPEED MODE
Full power at any speed

The creep mode delivers full power to the attachment while maintaining a low travelling speed. Important especially in connection with particularly hydraulically demanding attachments like cold planers, rock wheels and trenchers.

Comfort for the operator

+ No need anymore to constantly operate on the throttle to reach and maintain the desired travelling speed.
+ Easy to set either through the new 8” color display* or through the buttons on the left hand joystick.
+ Incremental speed settings from 1 to 100.

EFFECTIVE RIDE CONTROL
Optimised shock absorption

Comfort goes with productivity with CASE patented Ride Control. This optional feature is a shock absorber which reduces loader arm bouncing at elevated speed for greater material retention and increased operator comfort. More material moved, more quickly.

**available only with electro-hydraulic controls*

CHOOSE YOUR PREFERRED CONTROLS

Mechanical or Electro Hydraulic controls

CASE skid steer loaders are available with both electro-hydraulic and mechanical hand controls.

Proportional auxiliary hydraulics

Standard Proportional control of auxiliary hydraulics with detent for smooth and precise attachment control.

Tailor-made performance

Tailor-made performance CASE skid steer loaders and compact track loaders are equipped with EZ-EH (“Easy Electrohydraulic”) controls. Each operator can rapidly and easily obtain the desired setting level through the easy-to-set 8” display for a total customization of the controls.

NEW JOYSTICKS

Easy and comfortable to operate

+ Narrower palm grip for better ergonomics
+ Closer switch layout and smaller head size for easier operation
+ Smaller EH pods for more legroom for the operators comfort.

CASE
SR40B
CASE
CONSTRUCTION

POWER OUTSIDE, COMFORT INSIDE

HIGH VERSATILITY

Hydraulics simplified. Versatility maximised.

Connect Under Pressure (CUP) system to plug hydraulic hoses with no wrenches. Three different Auxiliary Hydraulics Packages offered:

1 STANDARD FLOW PACKAGE

+ The standard system operates the majority of available hydraulic attachments
+ The proportional control provides a precise control of the attachment

2 HIGH FLOW PACKAGE

+ Up to 55% more flow with the high-flow auxiliary hydraulics option (level 5)
+ High Flow is required to operate attachments such as cold planers, rock wheels or trenchers
+ A 14-pin front electric system is also available to handle multiple movements of the attachment directly from the joysticks

3 ENHANCED HIGH FLOW PACKAGE

+ 30% more pressure on the auxiliary hydraulic system with the Enhanced High Flow option (package level 7) for extreme applications, such as large cold planers and mulchers
+ The package level 7 option includes also a second auxiliary hydraulic circuit for applications requiring multiple movements simultaneously
+ This option is available on the 90 hp models: SR270B SV340B, TR340B and TV450B

MAIN REASONS
TO CHOOSE SSL-CTL RANGE

TOP RANKING BREAKOUT FORCE

+ Aggressive bucket cylinder kinematics for superior digging efficiency

CUSTOMIZABLE ROC

+ Additional counterweights

COMFORTABLE AND SAFE CAB

+ New 8” Display
+ Wide cab, flat floor, convenient lap bar, optimized A/C air flow
+ ROPS, FOPS certified
+ Suspension and heated seats

CREEP SPEED

+ Full hydraulic power at slow travelling speed
+ 1 to 100 incremental values
+ Easy set on the 8” display and controlled with the joystick

SIMPLE AND ROBUST UNDERCARRIAGE

+ Robust fixed undercarriage
+ Few moving parts
+ Self-lubricated rollers
+ Electro-hydraulically improved straight line tracking

HIGH VERSATILITY

+ Wide range of attachments
+ Different auxiliary hydraulic solutions to feed them

RADIAL AND VERTICAL BOOM

+ Radial for digging and pushing
+ Vertical for loading and carrying

OUTSTANDING STABILITY

+ Longer wheelbase
+ Optimized weight distribution

STAGE V ENGINE

+ Stage V engines featuring the High Pressure Common Rail (HPCR) technology for more torque output and outstanding fuel economy

HIGH VISIBILITY

+ Rear view camera
+ Unique side lightening
+ Large side windows for an excellent visibility
+ Better sight lines to the tires, bucket edge, curb lines and even to the rear when backing up

EASY ACCESS

+ Wider cab entrance
+ Lower thershold
+ Longer and ergonomic handles

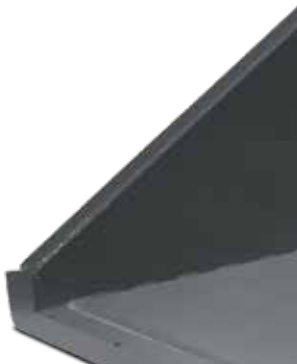

VERSATILE CONTROLS

+ Mechanical or EH customizable controls
+ Easily adjustable speed and sensitivity
+ ISO-H switchable controls
+ Ride Control for a greater operator comfort

FAST ATTACHMENT CHANGE OVER

+ Mechanic or hydraulic quick coupler
+ Connect Under Pressure (CUP) system to plug hydraulic hoses with no wrenches

POWER OUTSIDE, COMFORT INSIDE

SIMPLE AND ROBUST UNDERCARRIAGE TO ENSURE LONG-LASTING OPERATIVITY

The new CASE compact track loaders feature a robust undercarriage, engineered to hold fast on steep slopes and take command of muddy or sandy terrain. The undercarriage has a rigid-track frame with fewer moving parts for greater durability and easier maintenance than suspension-track systems.

1

Simple hydraulic track adjustment
Track tension is simply adjusted by adding or removing grease to an hydraulic cylinder.
Track tension is important to undercarriage life and track life.

2

Heavy-duty drive motor/final drive
Increases component life by using an oversized bearing in line with the drive sprocket and elevating the drive assembly, keeping it out of material.

3

Lifetime sealed and oil lubricated rollers and idlers
Duo-cone face seals utilize proven dozer oil-lubrication technology that provides greater reliability and lower maintenance costs.
The seals reduce the possibility of material and moisture getting into the rollers and idlers.

4

Triple flange rollers
Helps prevent de-tracking on inclines by using dozer-style rollers with a larger inner-diameter flange positioned between the track lugs.

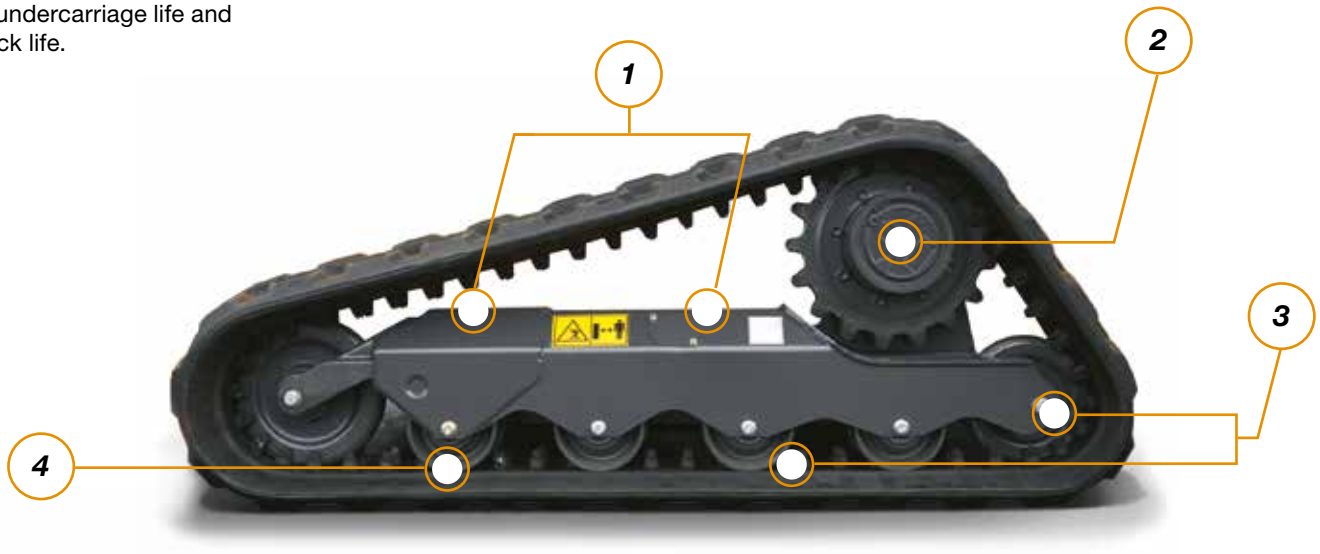

MAINTENANCE MADE EASY AND RATIONAL

SAFE AND EASY MAINTENANCE

Convenient cab tilting

With just two retaining bolts, the cab is easy to tilt, providing access to hydraulic and transmission components when necessary. A safety locking system that prevents the cab from dropping is automatically activated.

Best-in-class serviceability

Easy access, daily service points grouped together and remote mounted filters mean it's easy to keep CASE skid steer and compact track loaders working to their maximum efficiency.

1

SMART BATTERY AND DRAIN HOSES ACCESS
Battery and environmental drain hoses are easily accessible from the side of the machine, by removing a tap located behind the rear wheel, allowing quick service and fast maintenance activities.

Maintenance kept easy even with the most advanced T4 engine technology

VERSATILITY AND EFFECTIVENESS
EASILY CONNECTED

HIGH VERSATILITY TO UNDERTAKE ANY TYPE OF JOB

CASE skid steer loaders and compact track loaders can handle a broad range of attachments, providing outstanding versatility to serve a broad range of industries.

FAST ATTACHMENT CHANGE OVER

Handle attachments easily

The Connect Under Pressure standard feature allows you to connect tool hoses without a wrench. With the hydraulic coupler option attachments can be changed rapidly without leaving the cab.

Planer (350 mm)

Planer (1.000 mm)

Asphalt Float

Wheel Compactor

Rock Wheel

Hammer

Backhoe Bucket

Cement Mixer

Snow Blower

Snow Blade

4x1 Multipurpose Bucket

Broom Bucket

Pallet Forks

Farm Fork

Fork & Grapple

Bale Spike

For the complete offering check the on-line application guide for DIA & Attachments or contact a dealer!
http://application.cnh-parts-service.eu

Attachment	Application	Width (mm)	Depth (mm)	Weight (kg)	Flow	Compatible Model
Rock Wheel	Trenching jobs on hard, compact materials like asphalt and concrete, digging trenches on roads or in areas where movement is restricted.	Wheel width 80 - 130 - 200 80 - 130 - 200	Trench depth 150 - 450 200 - 600	1180 - 1255 1340 - 1595	High High	SR210 and bigger SR270 and bigger
Wheel Compactor	Compacting the bed of a trench before adding an asphalt surface layer.	Wheel width 200 - 250 - 300 350 - 400	0 - 750	710 - 970	Std	SR210 and bigger
Planers	Planning on asphalt or concrete. Overlaying road, industrial and courtyard surfaces. Maintenance of stretches of road. Restoration of damaged, bumpy or worn surfaces.	Drum width 350 450 600 1000	0 - 110 0 - 150 0 - 170 0 - 130	590 - 750 790 - 950 950 - 1110 1070 - 1250	Std/High High High	SR175 and bigger SR175/SV185/SR210/TR270/TR310 SR210 and bigger SR210 and bigger
Asphalt Float	Backfilling of trenches and widening road surface while maintaining the road's original gradient.	1900	N.A.	675	Std	SR210 and bigger
Hammers	Concrete demolition jobs, trenching and general excavation work. Several hammer tools available: moils, chisels, spades and compacting plates.	380 380 400	N.A. N.A. N.A.	275 385 505	Std / High High High	Medium and Large Frame models Medium and Large Frame models Large Frame models
Backhoe Bucket	Creation of trenches, foundations, drain and irrigation channels, etc. in private or public constructions, both for new or maintenance jobs. Several bucket sizes available.	1200 1600 1800	Digging depth 2480 2780 3260	520 750 1020	Std Std Std	SR175/SV185/SR210/SR240 SV280 and bigger
Cement Mixer	Production of cement for civil construction in isolated or difficult-to-access areas, or with limited availability of electric energy. Side discharge available.	1170 1490 1490 1575 1700 1760	Mixer capacity (lt) 160 210 250 270 320 460	639 794 945 1013 1188 1694	Std Std Std Std Std Std	SR175 and bigger SR210 and bigger SR240 and bigger SV280 and bigger TV370 and bigger
Snow Blower	Ideal for removing large amounts of snow without damaging the pavement. Features: effective Icebreaker system, limited front height (740 mm), hydraulic chute rotation (240°)	1600 1800 2100	N.A. N.A. N.A.	420 480 540	Std / High Std / High	Medium and Large Frame Skid Steers Medium Frame CTLs SR210 and bigger models
Snow Blade	Tiltable blade (+/- 30°) designed to roll out and evacuate snow. Features: Anti-skock system to reposition automatically the blade in working position, sidelights to work safely.	2100 2400	N.A. N.A.	315 410	Std Std	Medium frame models Large frame models
Dozer Blade	General dozing applications	1980 2135 2365 2640	N.A. N.A. N.A. N.A.	305 288 - 358 328 - 370 650	Std Std Std Std	Medium frame models Medium and large frame skid steers Medium frame CTLs Large frame models Large frame models
Wide range of Buckets Dirt & Foundry; Low Profile; Low Profile Extended, Heavy Duty, Light Material, Side Tip, High Tip	Digging, excavating, grading, material handling	1525 1680 1830 1850 2080	Capacity (m^3) 0.35 - 0.63 0.40 - 0.72 0.48 - 0.99 0.33 - 1.75 0.32 - 2.00	120 - 230 154 - 324 220 - 342 225 - 500 250 - 540	N.A. N.A. N.A. N.A. N.A.	SR175/SV185/SR210 SR175/SV185/SR210 SR240/SR270/SV280/SV340/TR270/TR310 SR240/SR270/SV280/SV340/TR340/TV370/TV450
4x1 Multipurpose Bucket	Multipurpose bucket: applications as conventional bucket, grab for back filling or as a dozer	1525 1680 1850 2080	Capacity (m^3) 0.33 - 0.35 0.40 0.43 - 0.44 0.50	253 - 280 283 - 320 310 - 403 435 - 453	Std Std Std Std	Medium frame skid steers Medium and large frame skid steers Medium frame CTLs Large frame models
Broom Bucket	Clearing yards, roads, footpaths, etc. Also efficient for snow clearance.	1780 1935 2100 2335	Capacity (m^3) 0.35 0.38 0.43 0.48	400 430 460 490	Std Std Std Std	Medium Frame models Medium Frame models Large Frame models
Farm Fork Fork & Grapple	Farm fork: General farm yard applications. Fork and Grapple: "Mucking out" bale and silage handling. Also suitable for industrial applications.	1525 1680 1850 2080	Capacity (m^3) 0.85 0.92 1.01 1.14	153 - 250 170 - 260 221 - 341 211 - 381	Std Std Std Std	Medium frame models Medium and large frame skid steers Medium frame CTLs Large frame models Large frame models
Pallet Fork	Handling of palletizes loads. Hydraulically operated side-shift option available.	Forks length 1000 1100 1200	N.A. N.A. N.A.	126-308 144-312 194-320	N.A. N.A. N.A.	SR210 and smaller SR210 and smaller All
Bale Spike	Handling of round bales	980	N.A.	55	N.A.	All

DIMENSIONS
AND SPECIFICATIONS

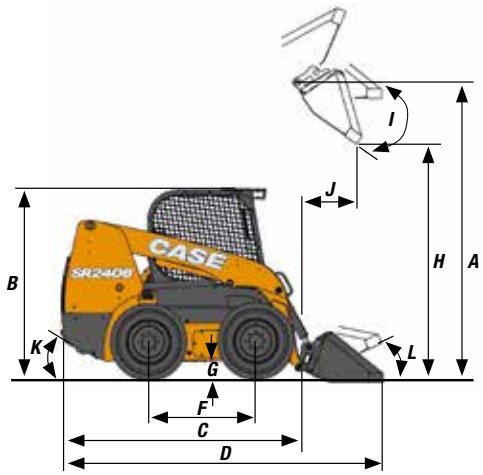

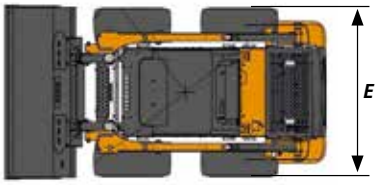

GENERAL DIMENSIONS		SR175B	SV185B	SR210B	SR240B	SR270B	SV280B	SV340B
A - Height to bucket hinge pin	mm	3099	3048	3124	3178	3178	3302	3343
B - Height to top of ROPS	mm	1974	1974	1998	2002	2004	2002	2044
C - Length without attachment	mm	2685	2685	2669	2981	3017	2990	3025
D - Length with DF bucket (LPE bucket)*	mm	3305 (3538)	3345 (3578)	3292 (3525)	3611 (3843)	3655 (3886)	3604 (3835)	3665 (3897)
E - Overall width	mm	1642	1642	1755	1768	1773	1768	1875
F - Wheelbase	mm	1128	1128	1128	1322	1322	1322	1322
G - Ground clearance	mm	178	178	203	203	203	203	244
H - Dump height with DF bucket (LPE bucket)*	mm	2470 (2322)	2380 (2214)	2495 (2347)	2562 (2419)	2562 (2422)	2629 (2465)	2671 (2507)
I - Dump angle	°	40	52	40	38	38	54	47
J - Dump reach @ max height with DF bucket (LPE)*	mm	542 (721)	783 (946)	517 (696)	494 (677)	484 (669)	672 (837)	615 (779)
K - Angle of departure	°	23	23	25	24	24	24	27
L - Rollback angle (bucket on ground)	°	32	35	31	31	31	35	35

SPECIFICATIONS		SR175B	SV185B	SR210B	SR240B	SR270B	SV280B	SV340B
Frame Size		Medium	Medium	Medium	Large	Large	Large	Large
Emissions Level		Stage V	Stage V	Stage V	Stage V	Tier 4F	Stage V	Tier 4F
PERFORMANCE SPECS		**SR175B**	**SV185B**	**SR210B**	**SR240B**	**SR270B**	**SV280B**	**SV340B**
Rated Operating Capacity 50%	kg	790	840	955	1088	1225	1270	1545
ROC with counterweights 50%	kg	835	885	1000	1178	1315	1360	1635
Tipping load	kg	1588	1678	1909	2177	2450	2540	3090
Lift cylinder breakout force**	kN	17.0	15.3	20.3	25.0	27.1	25.0	30.3
Bucket cylinder breakout force**	kN	32.3	24.7	32.3	39.4	38.6	33.7	42.4
ENGINE		**SR175B**	**SV185B**	**SR210B**	**SR240B**	**SR270B**	**SV280B**	**SV340B**
		PERKINS 404J-E22TA	PERKINS 404J-E22TA	FPT F5H	FPT F5H	FPT F5H	FPT F5H	FPT F5H
Displacement	l	2.2	2.2	3.4	3.4	3.4	3.4	3.4
Horsepower	hp/rpm	67 @ 2800	60 @ 2900	74 @ 2500	74 @ 2500	90 @ 2500	74 @ 2500	90 @ 2500
Peak torque	Nm/rpm	208 @ 1800	183 @ 1800	314 @ 1400	314 @ 1400	383 @ 1400	314 @ 1400	383 @ 1400
TRAVEL SPEED		**SR175B**	**SV185B**	**SR210B**	**SR240B**	**SR270B**	**SV280B**	**SV340B**
Low range	km/h	11.9	11.9	11.4	12.4	12.4	12.4	12.4
High range (optional)	km/h	18.5	18.5	16.9	18.5	18.5	18.5	18.5
HYDRAULIC SYSTEM		**SR175B**	**SV185B**	**SR210B**	**SR240B**	**SR270B**	**SV280B**	**SV340B**
Pump flow	LPM	78	78	92	92	92	92	92
Optional high flow	LPM	116	116	126	143	143	143	143
Relief pressure	bar	210	210	210	210	210	210	210
WEIGHTS		**N/A**	**N/A**	**N/A**	**N/A**	**277**	**N/A**	**277**
Operating weight	kg	2842	2980	3160	3350	3681	3670	4136
Shipping weight	kg	2705	2840	3025	3200	3526	3475	3890
SERVICE CAPACITY		**SR175B**	**SV185B**	**SR210B**	**SR240B**	**SR270B**	**SV280B**	**SV340B**
Fuel tank	l	73.8	73.8	73.8	96.5	96.5	96.5	96.5

* LPE (Low Profile Extended) is the standard ex-factory bucket. DF (Dirt & Foundry) bucket can be obtained through Parts dept.

** Breakout forces estimated considering both tip and hydraulic limits.

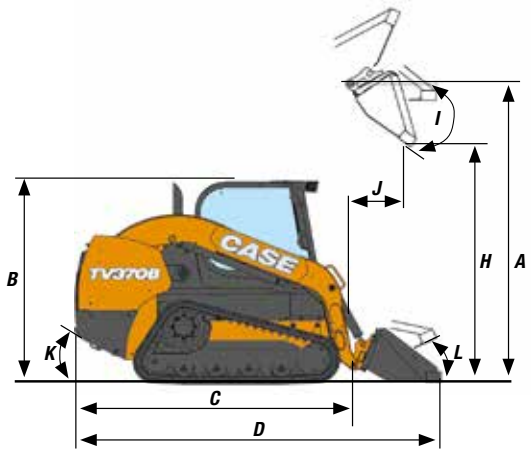

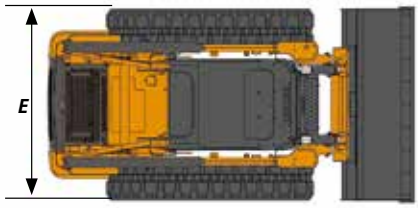

GENERAL DIMENSIONS		TR270B	TR310B	TR340B	TV370B	TV450B
A - Height to bucket hinge pin	mm	3178	3178	3218	3347	3344
B - Height to top of ROPS	mm	1998	1998	2044	2044	2044
C - Length without attachment	mm	2662	2662	3003	2984	3050
D - Length with DF bucket (LPE bucket)*	mm	3280 (3512)	3280 (3512)	3622 (3853)	3604 (3835)	3667 (3899)
E - Overall width	mm	1676	1887	1943	1943	1943
F - Wheelbase	mm	NA	NA	NA	NA	NA
G - Ground clearance	mm	207	207	244	244	244
H - Dump height with DF bucket (LPE bucket)*	mm	2556 (2410)	2556 (2410)	2596 (2450)	2669 (2505)	2645 (2481)
I - Dump angle	°	38	38	38	53	45
J - Dump reach @ max height with DF bucket (LPE)*	mm	566 (745)	566 (745)	540 (720)	716 (880)	727 (891)
K - Angle of departure	°	32	32	32	32	32
L - Rollback angle (bucket on ground)	°	31	31	31	35	32

SPECIFICATIONS		TR270B	TR310B	TR340B	TV370B	TV450B
Frame Size		Medium	Medium	Large	Large	Large
Emissions Level		Stage V	Stage V	Tier 4F	Stage V	Tier 4F
PERFORMANCE SPECS		**TR270B**	**TR310B**	**TR340B**	**TV370B**	**TV450B**
Rated Operating Capacity 50%	kg	50%: 1225 35%: 860	50%: 1406 35%: 984	50%: 1542 35%: 1079	50%: 1682 35%: 1178	50%: 2045 35%: 1432
ROC with counterweights 50%	kg	50%: 1280 35%: 915	50%: 1461 35%: 1039	50%: 1767 35%: 1264	50%: 1927 35%: 1331	50%: 2343 35%: 1618
Tipping load	kg	2450	2810	3084	3364	4091
Lift cylinder breakout force**	kN	27.8	29.0	34.5	26.8	33.9
Bucket cylinder breakout force**	kN	32.3	38.6	38.7	33.4	41.8
ENGINE		**TR270B**	**TR310B**	**TR340B**	**TV370B**	**TV450B**
Engine make - Model		FPT F5H	FPT F5H	FPT F5H	FPT F5H	FPT F5H
Displacement	l	3.4	3.4	3.4	3.4	3.4
Horsepower	hp/rpm	74 @ 2500	74 @ 2500	90 @ 2500	74 @ 2500	90 @ 2500
Peak torque	Nm/rpm	314 @ 1400	314 @ 1400	383 @ 1400	314 @ 1400	383 @ 1400
TRAVEL SPEED		**TR270B**	**TR310B**	**TR340B**	**TV370B**	**TV450B**
Low range	km/h	8,2	8,2	8,2	8,2	8,2
High range (optional)	km/h	12,2	12,2	12,2	12,2	12,2
HYDRAULIC SYSTEM		**TR270B**	**TR310B**	**TR340B**	**TV370B**	**TV450B**
Pump flow	LPM	92	92	92	92	92
Optional high flow	LPM	123	123	143	123	143
Relief pressure	bar	210	210	210	210	210
Optional enhanced high flow	bar	N.A.	N.A.	277	N.A.	277
WEIGHTS		**TR270B**	**TR310B**	**TR340B**	**TV370B**	
Operating weight	kg	3750	4027	4536	4370	4536
Shipping weight	kg	3615	3891	4380	4220	4380
SERVICE CAPACITY		**TR270B**	**TR310B**	**TR340B**	**TV370B**	
Fuel tank	l	73.8	73.8	96.5	96.5	96.5

With Standard Bucket - ** Breakout forces estimated considering both tip and hydraulic limits.

EXPERTS FOR THE REAL WORLD
SINCE 1842

CASE CONSTRUCTION

BUILDING A STRONG CASE.

Since 1842, at CASE Construction Equipment we have lived by an unwavering commitment to build practical, intuitive solutions that deliver both efficiency and productivity.

We continually strive to make it easier for our customers to implement emerging technologies and new compliance mandates.

Today, our global scale combined with our local expertise enables us to keep customers' real-world challenges at the center of our product development.

The vast CASE dealers' network is always ready to support and protect your investment and exceed your expectations, while also providing you with the ultimate ownership experience.

Our goal is to build both stronger machines-and stronger communities. At the end of the day, we do what's right for our customers and our communities so that they can count on CASE.

CNH Industrial
Deutschland GmbH
Case Baumaschinen
Benzstr. 1-3 - D-74076 Heilbronn
DEUTSCHLAND

CNH Industrial
Maquinaria Spain, S.A.
Avenida Aragón 402
28022 Madrid - ESPAÑA

CNH Industrial France, S.A.
16-18 Rue des Rochettes
91150 Morigny-Champigny
FRANCE

CNH Industrial Italia Spa
Lungo Stura Lazio 19
10156, Torino
ITALIA

CASE Construction Equipment
Cranes Farm Rd
Basildon - SS14 3AD
UNITED KINGDOM

NOTE: Standard and optional fittings can vary according to the demands and specific regulations of each country. The illustrations may include optional rather than standard fittings - consult your Case dealer. Furthermore, CNH Industrial reserves the right to modify machine specifications without incurring any obligation relating to such changes.

Conforms to directive 2006/42/EC

CASECE.COM
00800-2273-7373

The call is free from a land line.
Check in advance with your Mobile Operator if you will be charged. Toll free number not available from all calling areas.

Form No. 20226GB - MediaCross Firenze - 07/22